ENGINE, STARTER - Z26NEY99A4/B4/A6/B6 (C730513)

2026 RZR - RZR XP S 1000 ULTIMATE (R01) - Z26NEY99A4/B4/A6/B6

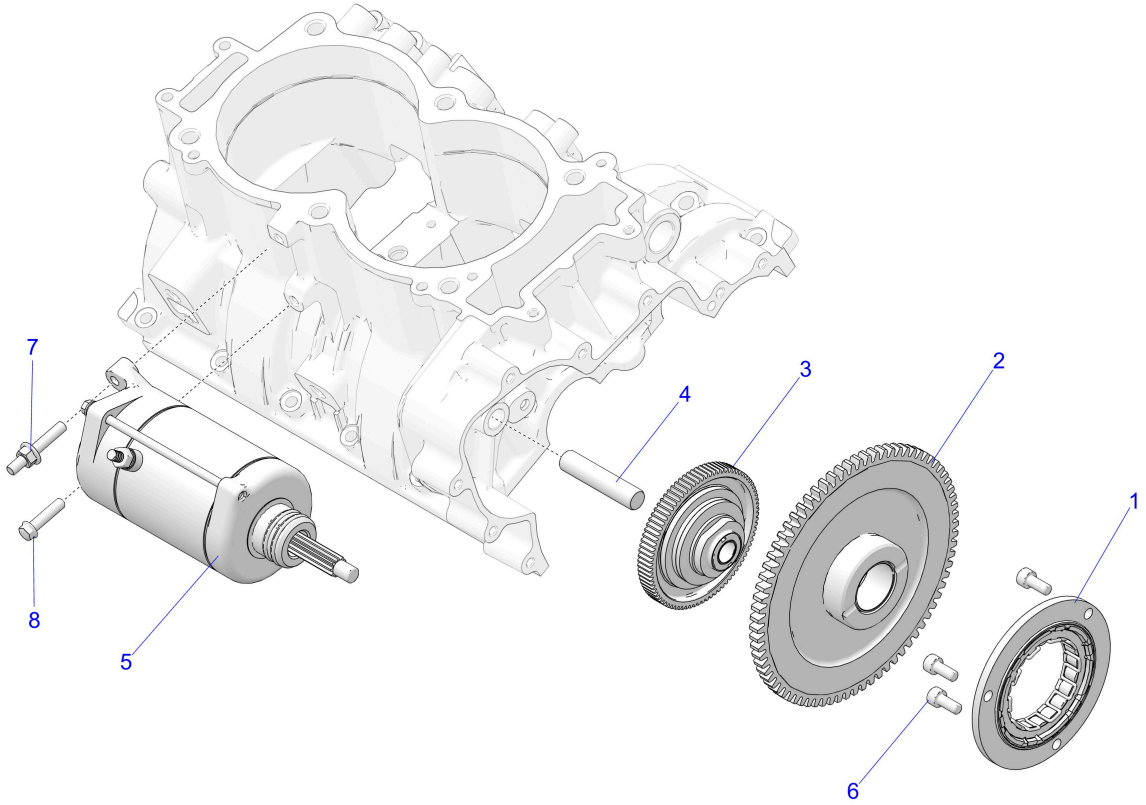

© 2022 Polaris Industries Inc. C730513

Reference #	*Part#*	*Description*	*Quantity*
1	1204884	ASM-SPRAG CLUTCH,HUB,STARTER	1
2	1208774	ASM-GEAR,STARTER,CRANK	1
3	3024038	ASM-TLG	1
4	3022416	PIN-TQ,LIMIT,GEAR	1
5	4014548	STARTER-9T,CW	1
6	7517431	SCREW-M6X1.0X14.0,HX/SOC/CP-Y/D	3
7	7519237	STUD-DOUBLE,END,M6X1.0X25/10	1
8	7519297	SCREW-HXFLG,M6X1.0X25,10.9	1

Copyright 1996-2026 Polaris Industries U.S.A All rights reserved.